NACHi

Standard specifications

MZ07-01/MZ07P-01-CFD
MZ07L-01/MZ07LP-01-CFD

1st edition

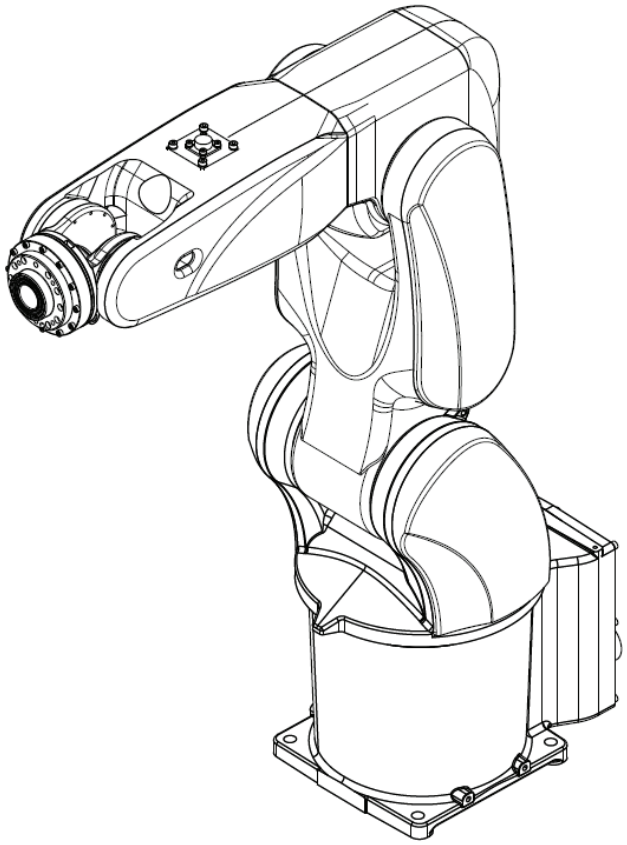

NACHI-FUJIKOSHI CORP.

1310, SMZEN-054-001,003

NACHi

Table of contents

1. Outline 1

2. Basic specifications 2

2.1 Basic specification of Robot body 2

2.2 Basic specification of Controller 3

3. Dimensions 4

3.1 Robot dimensions and Working envelope 4

3.2 Controller dimensions and Teach pendant appearance 6

4. Details of load mounting face 8

5. Installation procedure 9

5.1 Installation of Robot body 9

5.2 Installation of Controller 10

6. Allowable wrist load 11

7. Application wiring and tube diagram 13

8. Control specification 15

9. PC tool 18

10. Options 19

11. Delivery style (specification which contains a robot) 22

12. Consuming power (Robot + Controller) 22

13. Paint color (Robot) 22

14. Warranty 22

1. Outline

"NACHI ROBOT" has used mechatronic techniques, cultivated throughout the last few decades, to supply robots suited for industries utilizing welding and the material handling techniques.

"MZ series" is a small, simple structure, high speed and high accuracy robot which is optimal for material handling and other application. Because of the hollow arm wrist, simplified wiring from the robot body to the tool is possible. This can reduce the wiring burden of customer.
MZ series has 4 kind of base type. Each base type has connection variation, installation variation and application variation as shown below.

Base type

	5 axes type	6 axes type
Normal arm (reach 723mm)	MZ07P-01	MZ07-01
Long arm (reach 912mm)	MZ07LP-01	MZ07L-01

Note) "5 axes type" does not have axis No.4, comparing with "6 axes type". This robot is optimal for picking work because its wrist is fixed to downward direction.

Detail type

MZ07 * -01- * * *

Connection variation

Mark	Specification	Notes
0	Rear connection	Robot to controller cable is connected at robot rear
B	Bottom connection	Robot to controller cable is connected at robot bottom

Installation variation

Mark	Specification	Notes
0	Standard	Axis 1 working envelope ±30°at wall mounting
W	Wall mount	Axis 1 working envelope ±170°at wall mounting

Application variation

Mark	Specification	Solenoid valve	Signal wires	Notes
0	Standard	Max. 3	10 wires	
V	Vision sensor	Max. 2	10 wires	LAN cable、Light cable
U	Vision sensor (cross laser)	Max. 1	10 wires	LAN cable、Light cable, Laser cable
F	Force sensor	Max. 1	10 wires	6 freedom Force sensor cable
S	Additional axis	Max. 1	10 wires	1 motor and 1 encoder cable

Arm variation

Mark	Specification	Notes
(none)	6 axes Standard arm	Max reach 723mm
L	6 axes Long arm	Max reach 912mm
P	5 axes Standard arm	Max reach 723mm (does not have axis No.4)
LP	5 axes Long arm	Max reach 912mm (does not have axis No.4)

2. Basic specifications

2.1 Basic specification of Robot body

Item		Specifications			
Robot model		MZ07-01	MZ07P-01	MZ07L-01	MZ07LP-01
Construction		Articulated			
Number of axis		6	5	6	5
Drive system		AC servo motor			
Max. working envelope	Axis 1	±170 °			
	Axis 2	-135 ～ 80 °			
	Axis 3	-136 ～ 270 °		-139 ～ 270 °	
	Axis 4	±190 °	—	±190 °	—
	Axis 5	±120 °			
	Axis 6	±360 °			
Max. speed *6	Axis 1	450 °/s		300 °/s	
	Axis 2	380 °/s		280 °/s	
	Axis 3	520 °/s		360 °/s	
	Axis 4	550 °/s	—	550 °/s	—
	Axis 5	550 °/s			
	Axis 6	1000 °/s			
Max. pay load	Wrist	7 kg			
Allowable static load torque	Axis 4	16.6 N･m	—	16.6 N･m	—
	Axis 5	16.6 N･m			
	Axis 6	9.4 N･m			
Allowable moment of inertia *1	Axis 4	0.47 kg･m^2	—	0.47 kg･m^2	—
	Axis 5	0.47 kg･m^2			
	Axis 6	0.15 kg･m^2			
Position repeatability *2		±0.02mm		±0.03mm	
Max. reach		723mm		912mm	
Air tubes		φ6×2			
Application signal wires		10 wires			
Installation *3		Floor / Wall / Tilted / Inverted mount			
Ambient conditions		Temperature: 0 to 45 ºC *4 Humidity: 20 to 85%RH (No dew condensation allowed) Vibration to the installation face: Not more than 0.5G (4.9 m/s^2)			
Dust-proof / Drip-proof performance *5		IP67 equivalent (dust and drain proof-type)			
Robot mass		30kg		32kg	

1[rad] = 180/π[°], 1[N･m] = 1/9.8[kgf･m]
- On controller display, axis 1 to 6 is displayed as J1 to J6 for each.
- The specification and externals described in this specifications might change without a previous notice for the improvement.
- Explosion-proof is not available.

*1: The Allowable moment of inertia of a wrist changes with load conditions of a wrist. *2: This value conforms to "JIS B 8432".
*3: Working envelop is limited when wall mount and angle mount. (Example; axis 1 working envelop is ±30° in case of wall mount) *4: Permitted height is not higher than 1,000m above sea level. If used in higher place, permitted temperature is affected by height. *5: Liquid such as organic compound, acidity, alkalinity, chlorine or gasoline cutting fluid which deteriorates the seal material are not available to use. *6: The "Max. speed" in this table is the available maximum value and will change depending on the work-program and the wrist load condition.

2.2 Basic specification of Controller

Item	Specification
Controlled axis	Simultaneous 6 axes (maximum 7 axes as option)
Servo motor	AC servo motor
Position reader	Absolute encoder
Programming language	Teaching playback
Program number	9,999 programs
Memory capacity	256MB (2,560,000 steps equivalent)
Teach pedant	***<Smart TP>*** Single hand 3 position enable switch (left hand), Emergency stop button 5.7 inches color LCD (640*480, with back light), Touch panel With USB memory port, standard cable length 4m, IP65 equivalent (except connector) Weight: 0.96kg (except cable), Cable diameter ϕ8.3mm
	<Compact TP> Single hand 3 position enable switch (left hand), Emergency stop button Monochromatic, 20 characters * 4 lines (alphabet and number) standard cable length 4m, IP54 equivalent (except connector) Weight: not more than 0.4kg (except cable)
Operating panel	Mode select switch (teach/playback), Emergency stop button,
Safety function	PLd (category 3)
Cables to robot	Standard cable length 2m
Memory device	Flash memory
External memory device	USB memory (USB memory itself is not accessory of controller)
Auxiliary slot	2 PCI slots
Dust proof, drip proof	IP20 equivalent
Cooling	Indirect cooling method
Primary power supply	AC200V – 230V +/- 10%（3 phase, 50/60Hz）D grounding AC200V – 230V +/- 10% （2 phase, 50/60Hz） D grounding Main circuit protector 15A, Leak current maximum 100mA Connector is accessory of controller Power supply cable size maximum φ12.5mm
Power supply for interface circuit	DC24V 0.8A at maximum
Ambient temperature	0 – 45 degree (50/60Hz)
Ambient humidity	20 – 85% (no dew)
Installation	Not higher than 1,000m above sea level
External dimension	W369 * D490 * H173 mm
Weight	Approx.17kg
Others	Conforms to RoHS

3. Dimensions

3.1 Robot dimensions and Working envelope

【MZ07-01】【MZ07P-01】

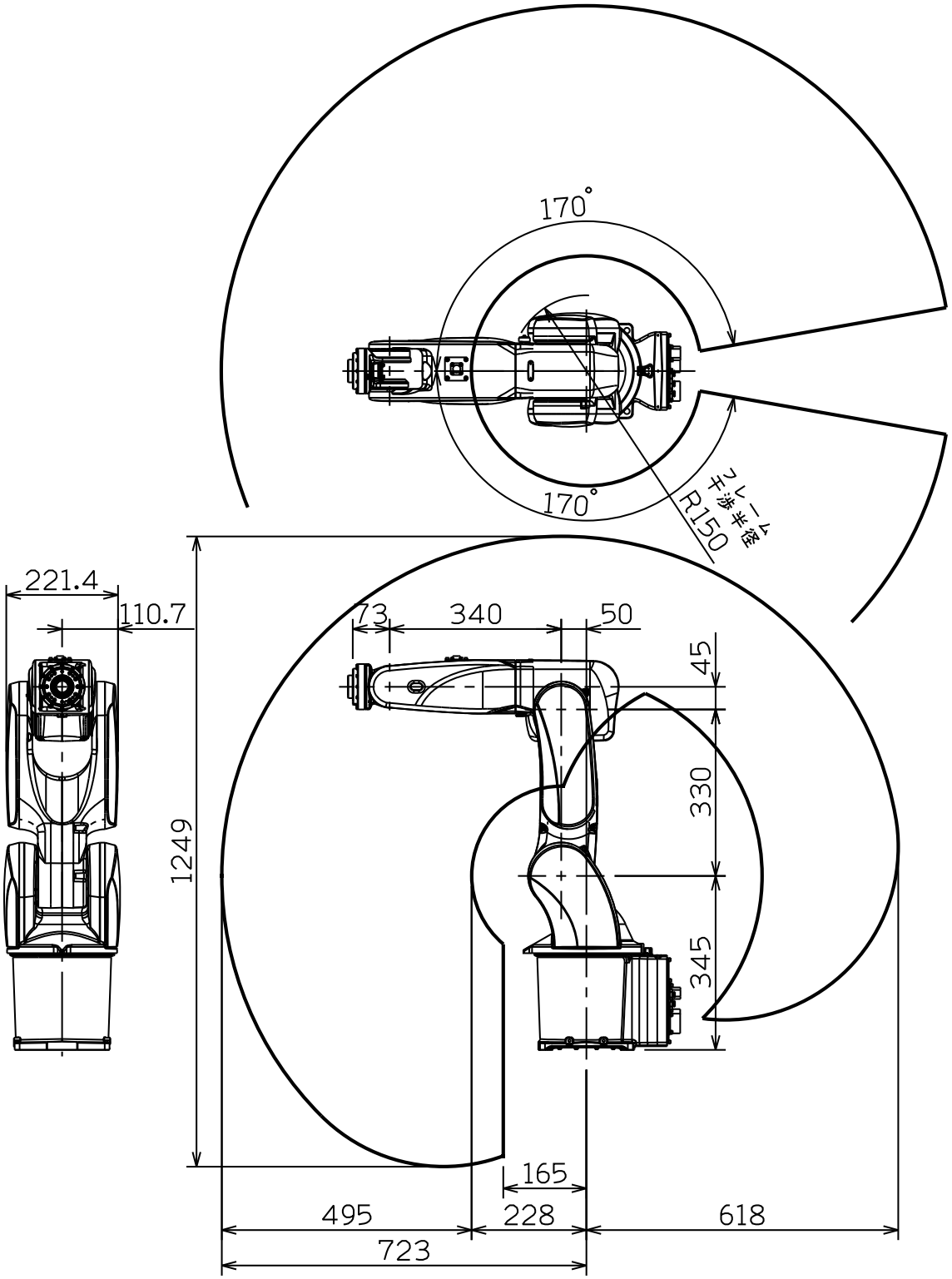

【MZ07L-01】【MZ07LP-01】

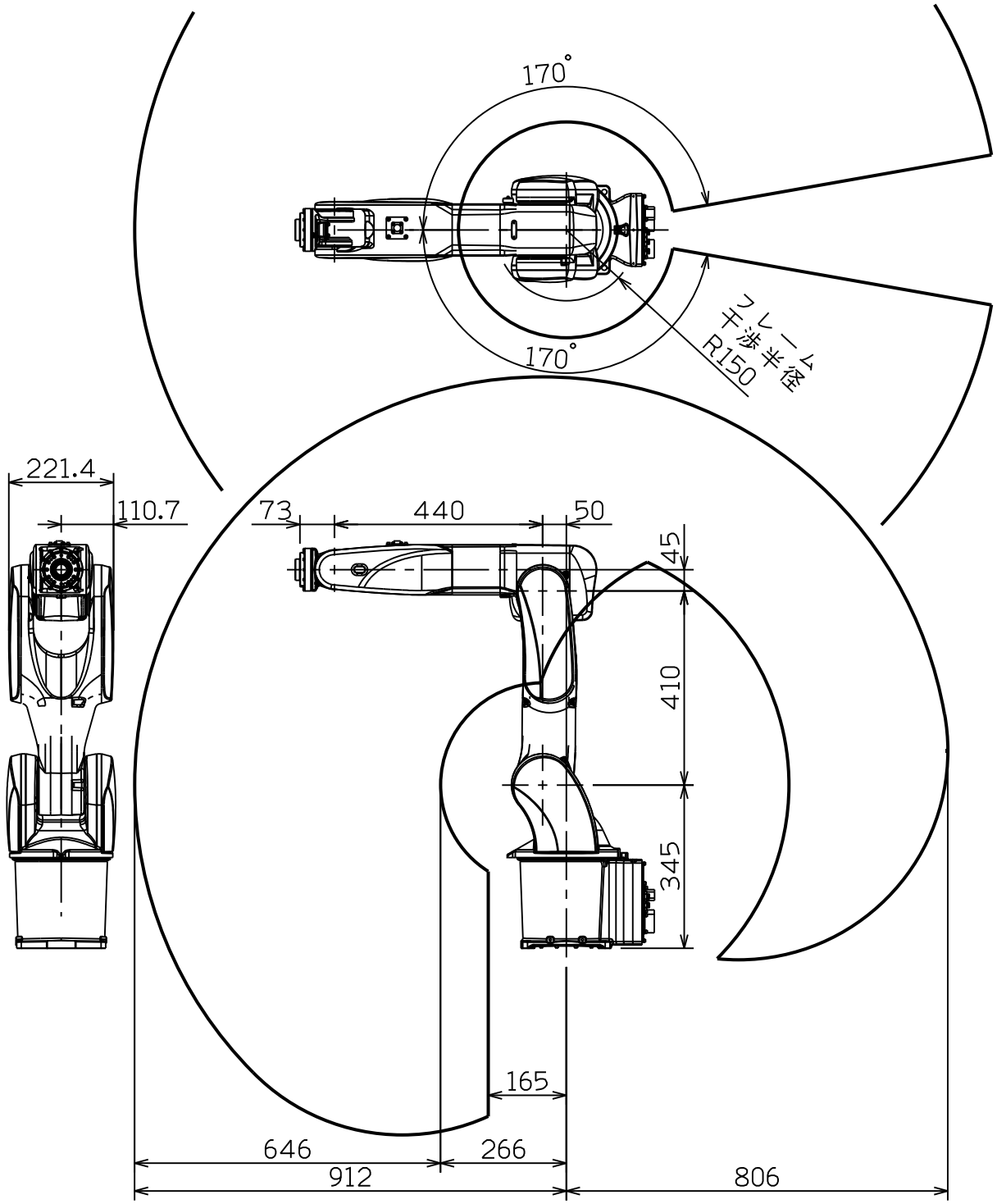

3.2 Controller dimensions and Teach pendant appearance

■ **Controller cabinet**

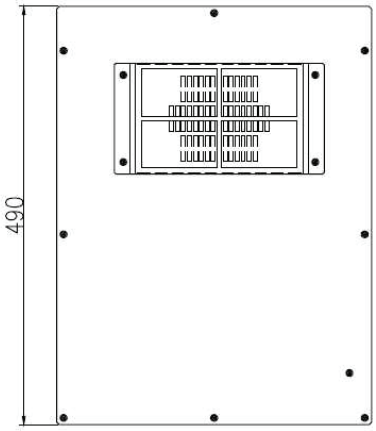

Top view

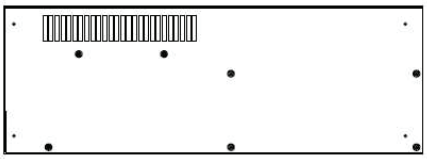

Left side view

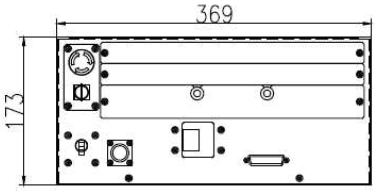

Front view

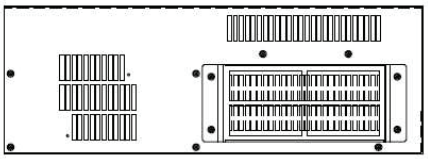

Right side view

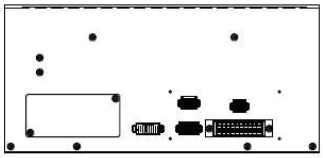

Rear view

■ Smart TP (Teach Pendant)

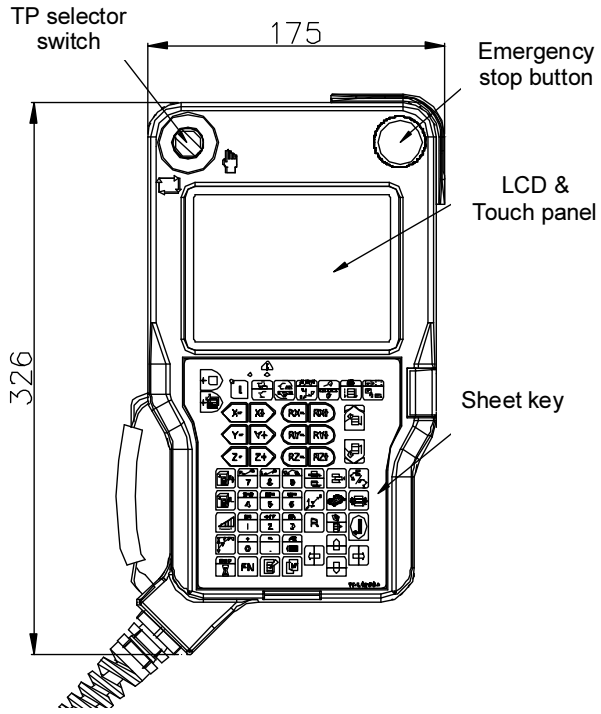

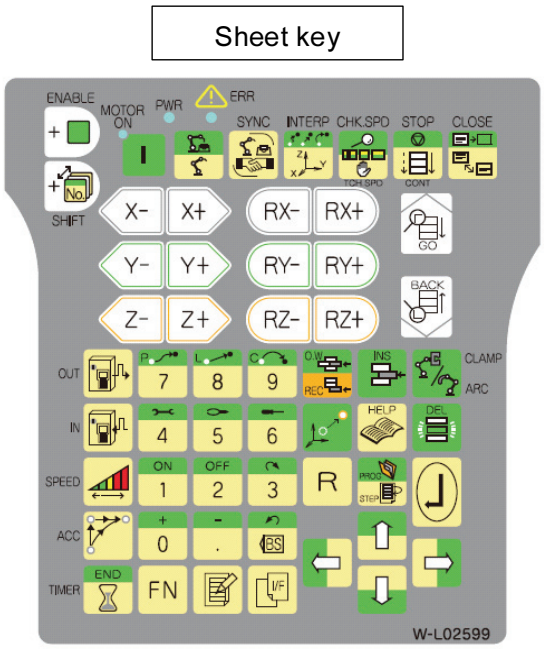

■ Compact TP (Teach Pendant)

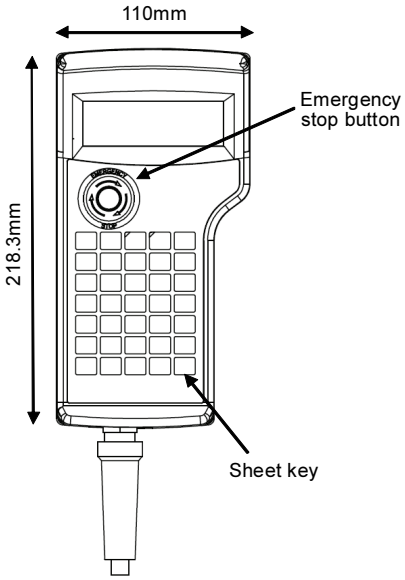

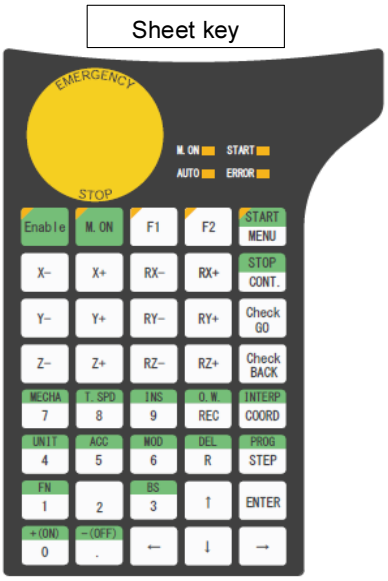

4. Details of load mounting face

For the tool fixing bolts, use the mounting P.C.D. shown in the following figures.

CAUTION	Be sure to screw the M5 tool fixing bolts in the wrist not deeper than the screw depth in the mounting face. Screwing the bolts deeper than the screw depth may damage the wrist.

【MZ07-01】【MZ07P-01】【MZ07L-01】【MZ07LP-01】

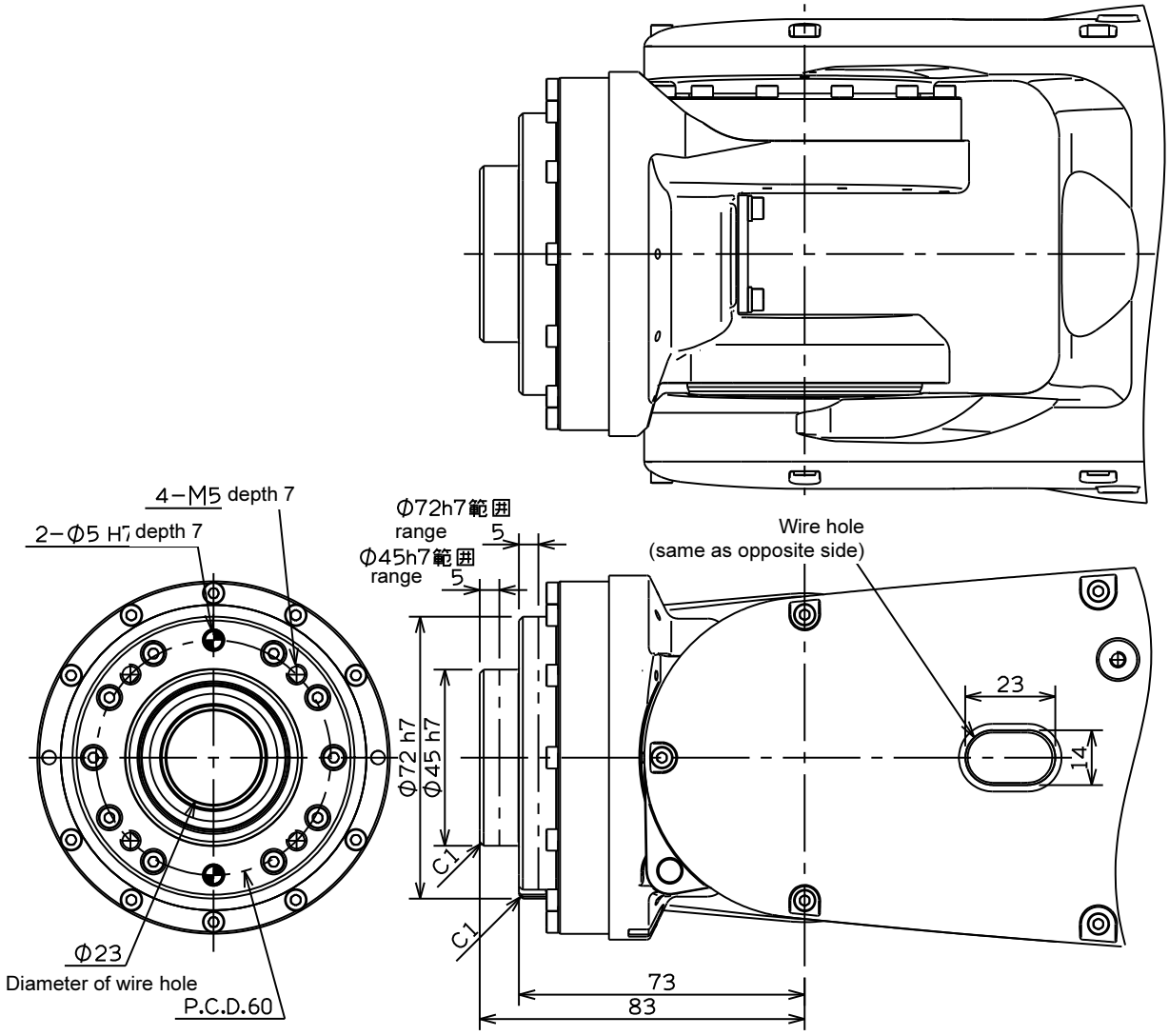

5. Installation procedure

5.1 Installation of Robot body

■ Installation space

To install the robot, lock the swiveling base of the robot.

WARNING	The mechanical stopper end is located in a position exceeding the specified working envelope (software limit) of axis 1. To install the safety fence, with consideration given to the wrist configuration and the shape of tool.
WARNING	On axis 1, 2 and 3, the robot working envelope can be regulated for safety. Optional part is necessary to enable this function.

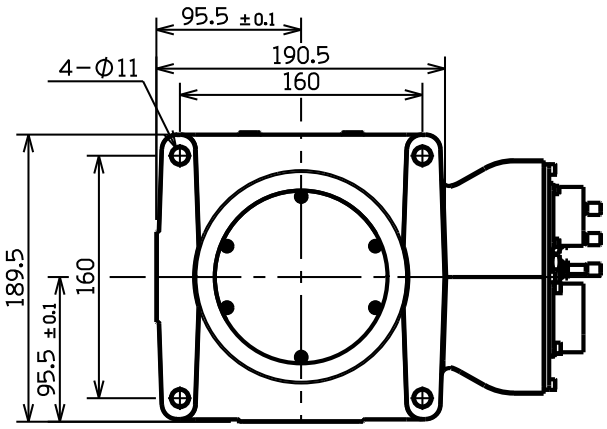

■ Accuracy of installation surface

When installing robot, strictly observe precautions listed below to cause no deformation in the base.

(1) Make the deviation from the flatness of the 4 plates on the robot installation surface fall within 0.2 mm.

(2) Make the deviation in height between the 4 places of each base plate installation surface and the robot installation surface fall in the range of 0.2 mm (±0.1 mm).

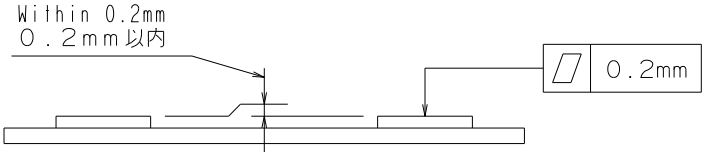

■ Maximum robot generative force

Robot model	Maximum Vertical generative force F_V	Maximum horizontal generative force F_H	Maximum Vertical generative moment M_V	Maximum horizontal generative moment M_H
MZ07-01 MZ07P-01	1,600N	1,200N	1,000Nm	900Nm
MZ07L-01 MZ07LP-01	2,000N	1,500N	1,250Nm	1,130Nm

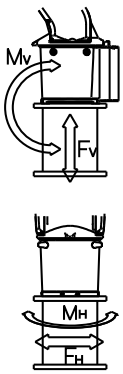

5.2 Installation of Controller

Keep a clearance of at least 200 mm between the controller and the wall behind it in order to ensure proper ventilation. CFD controller is not dust-proof drip-proof. If dust-proof and drip-proof is necessary, controller protection BOX (option) is necessary.

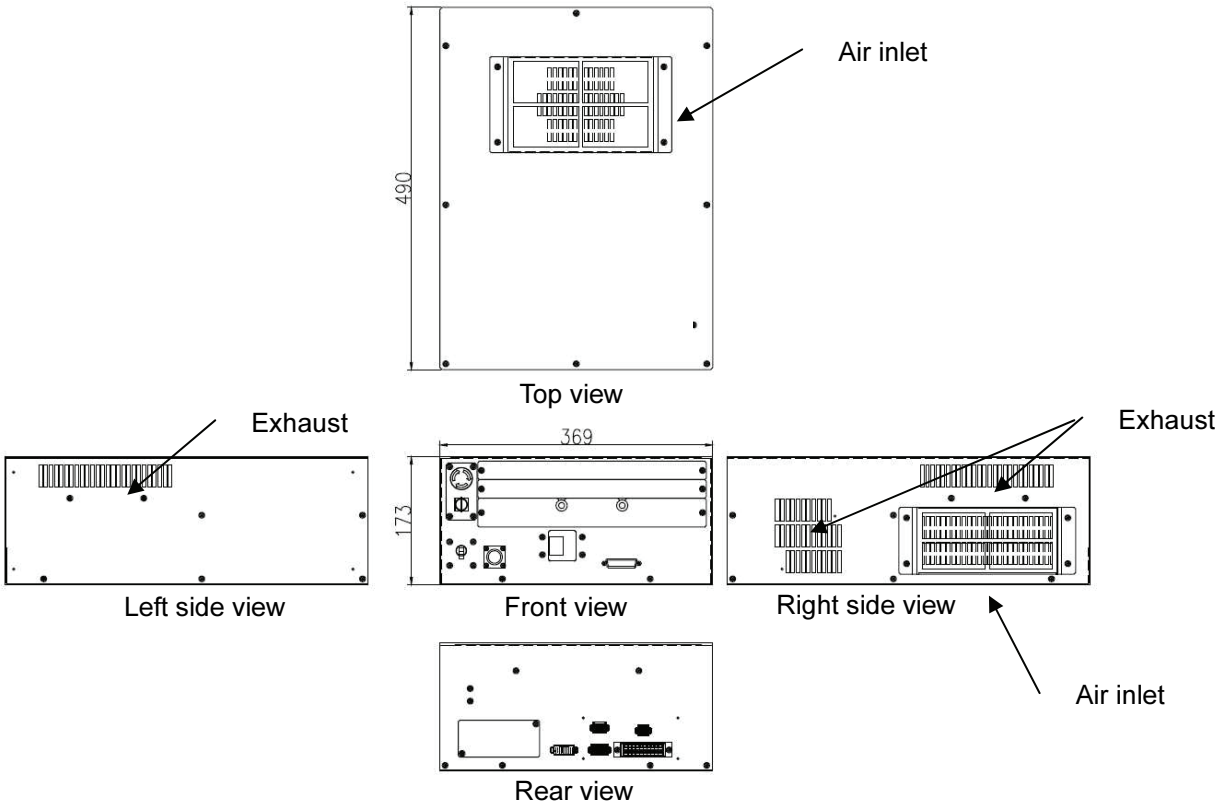

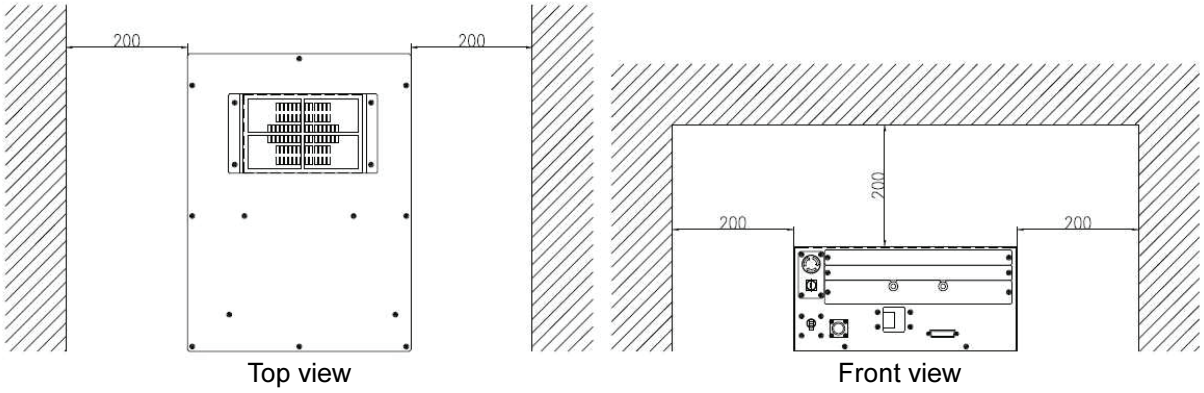

6. Allowable wrist load

CAUTION	**Load fixed on the tip of wrist is regulated by "allowable payload mass", "allowable static load torque", and "allowable moment of inertia". Strictly keep the wrist load within each allowable value. If wrist load exceeds the allowable value, this robot is out of guarantee.** Refer to the table of "2. Basic specifications" and following figures for the detail of each specification.

■ Torque map for wrist load

Use the robot under condition that COG of wrist load falls in the range shown in the torque map.

【MZ07-01】
【MZ07P-01】
【MZ07L-01】
【MZ07LP-01】

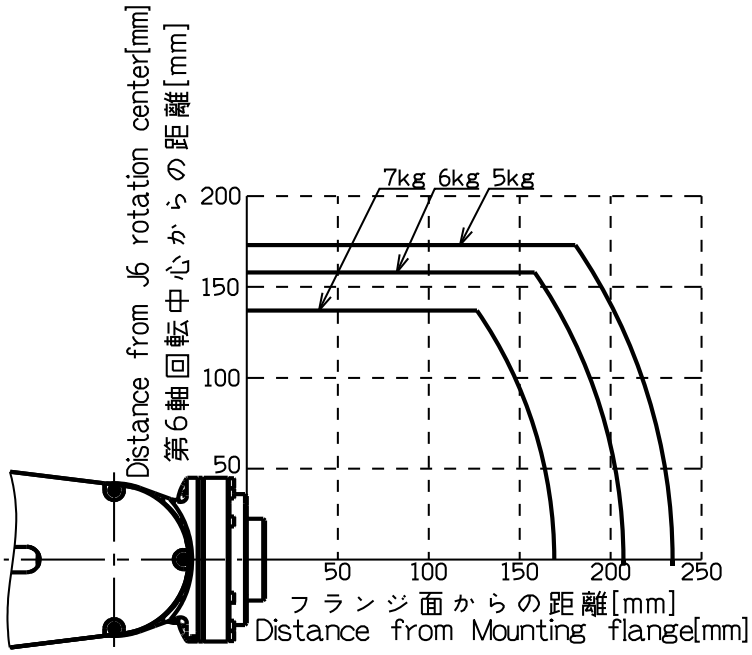

■ Moment of inertia map for wrist load

Use the robot under condition that static load torque and moment of inertia fall in the range shown in the figures below.

【MZ07-01】
【MZ07P-01】
【MZ07L-01】
【MZ07LP-01】

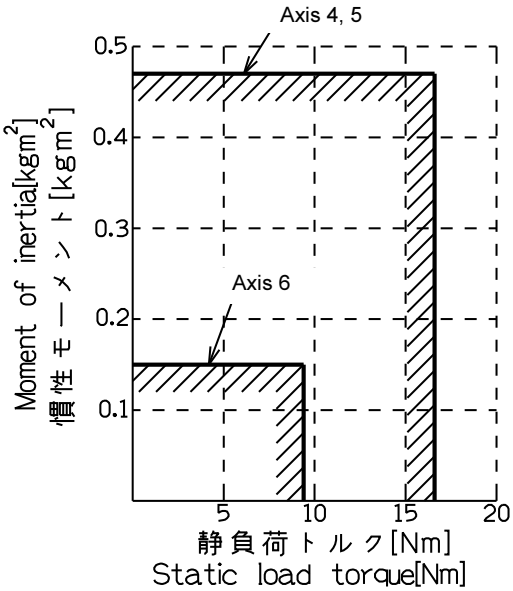

IMPORTANT	If the moment of inertia exceeds the specification, maximum speed is automatically limited by the software to protect the robot.

■ How to find the inertia moment of each axis

The following section shows general methods of calculating the inertia moment around each axis.

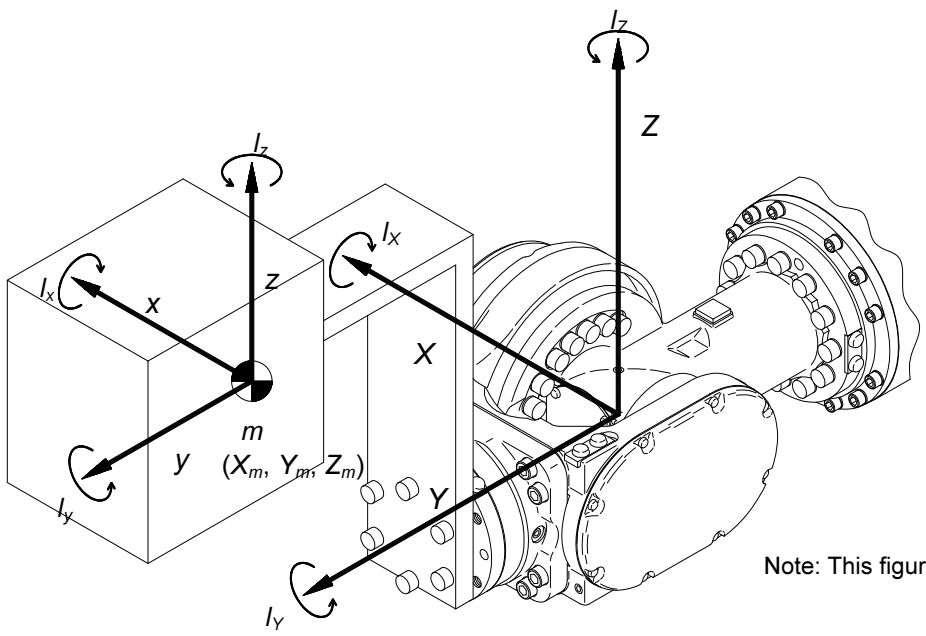

Note: This figure differs from MZ07 wrist.

X: Axis 5 rotation in the basic wrist configuration
Y: Axis 6 and axis 4 rotation in the basic wrist configuration
Z: Axis at right angles to the X and Y axes in the basic wrist configuration
x: Axis parallel to the X axis in the load gravity center
y: Axis parallel to the Y axis in the load gravity center
z: Axis parallel to the Z axis in the load gravity center
I_x: Inertia moment around the X axis passing through the load gravity center
I_y: Inertia moment around the Y axis passing through the load gravity center
I_z: Inertia moment around the Z axis passing through the load gravity center
m: Load mass
(X_m, Y_m, Z_m): Gravity center coordinates of load

1. Inertia moment around axis 6

The inertia moment of around axis 6 is found by the expression shown below.

$$I_{J6} = I_Y = m \cdot (X_m{}^2 + Z_m{}^2) + I_y$$

2. Inertia moment around axis 4 and axis 5

The inertia moment around axis 4 and axis 5 varies with axis 6 configuration. Consequently, in order to simplify the calculation, take a maximum value around the X and Z axes in above figure, as the inertia moment.

$$I_{J4J5} = \max(I_X, I_Z)$$

$$\because I_X = m \cdot (Y_m{}^2 + Z_m{}^2) + I_x$$

$$\because I_Z = m \cdot (X_m{}^2 + Y_m{}^2) + I_z$$

7. Application wiring and tube diagram

■ **Solenoid valve option**

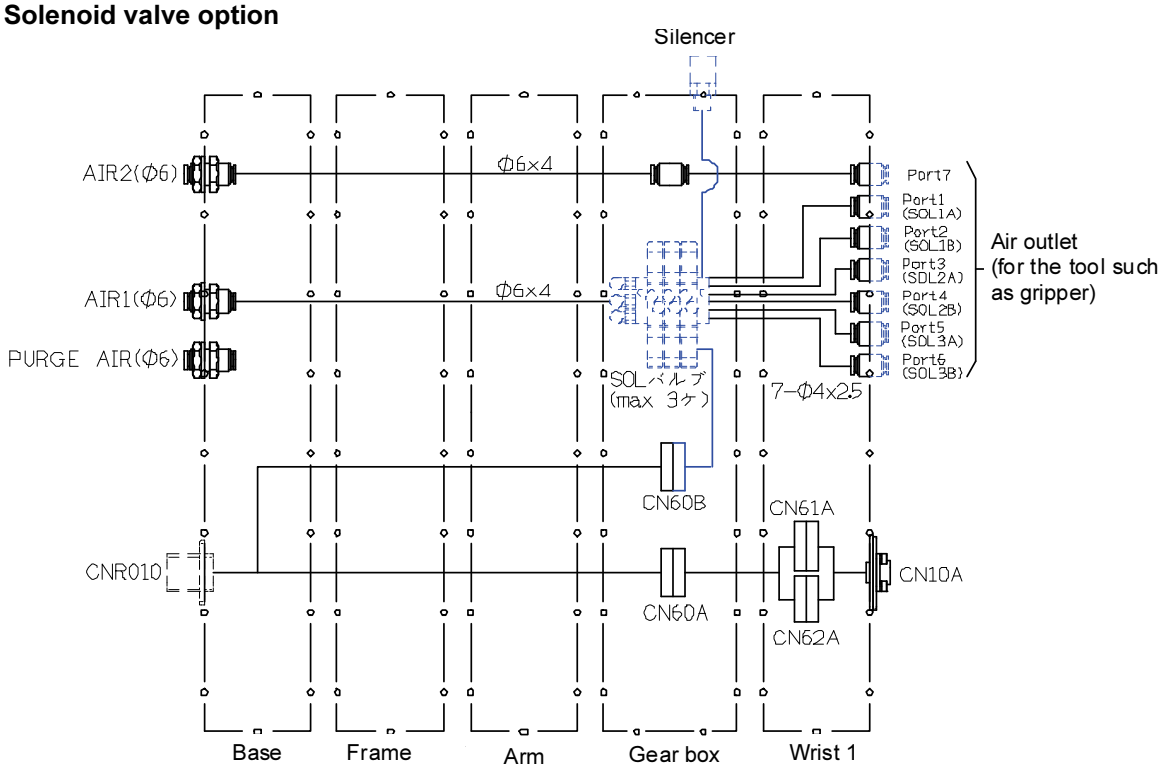

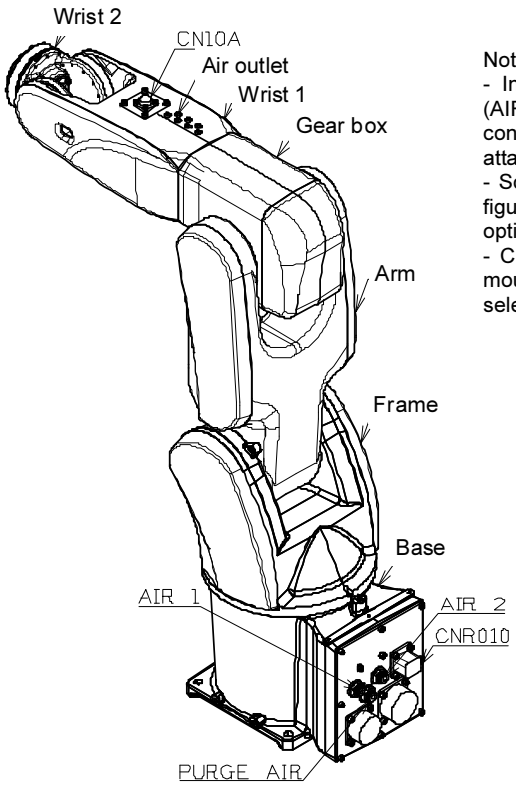

Note)
- In standard specification, only 2 air lines (AIR1 to Port1 and AIR2 to Port2) are connected directly inside gear box. Plugs are attached on air outlet.
- Solenoid valves and silencer written in this figure are mounted when “solenoid valve” option is selected.
- CNR010 connector written in this figure is mounted when “I/O harness” option is selected.

■ **Detailed diagram of the application connectors**

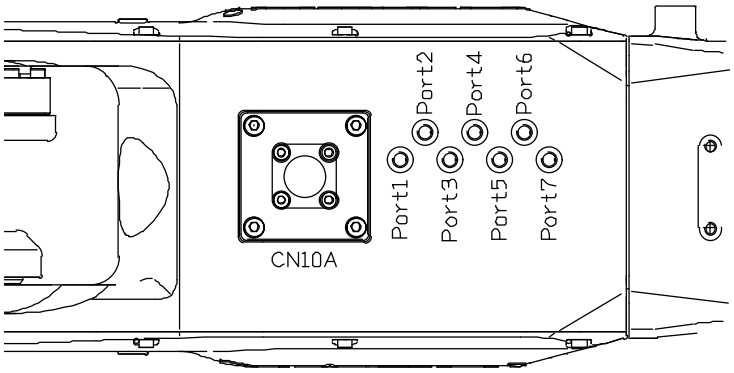

	6	5	4	3	2	1
D	G	A20	A19	A18	A17	A16
C		A15	A14	A13	A12	A11
B	A22	A10	A09	A08	A07	A06
A	A21	A05	A04	A03	A02	A01

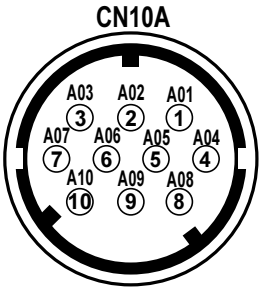

Connector CNR010 on base
Tyco AMP 1939839-1, 1939840-1,1903112-2
Partner connector type
Tyco AMP 1981560-1, 1939850-1,1827570-2

Connector CN10A on wrist 1
JAE JN1AS10ML1-R
Partner connector type
JAE JN1DS10SL2

8. Control specification

○; Supported, —; Setting disable (Execution enable), ×; Not supported

Functions	Abstract	Smart TP	Compact TP
Robot language	SLIM language is supported for complicate application.	○	—
Interpolation	Linear interpolation; XYZ parallel movement on robot coordinate system (based on the world wide standard JIS B8437) Fixing TCP; Changing robot attitude while fixing TCP point Tool coordinate; XYZ parallel movement on tool coordinate system Circular interpolation; Movement on circle by determined with 3 points. Start point and end point can be designated individually.	○	○
Low speed playback	TCP speed is limited 250mm/sec under following condition. ・ Low speed signal input ・ Check GO/BACK operation ・ First step playback after STEP number is designated	○	○
Speed definition	TCP linear speed 1 - 5000mm/sec（0.1mm/sec unit） Time 0.01 - 100sec（0.01sec unit） Power ratio 1.0 - 100.0 %（0.1% unit） Tool angle speed 1 - 500deg/s (1deg/s unit)	○	○
Speed override	Playback speed can be varied 1 - 150% without changing recorded speed.	○	○
Check GO/BACK	In teach mode, recorded position can be confirmed step by step or continuously, and forward / backward. (Functions also can be played back.)	○	○
Accuracy	8 degrees (0 - 1000mm) of in position accuracy can be designated on every step. And in-position or path-through can be designated also.	○	○
Tool designation	32 different tools can be designated on every step.	○	—
Automatic tool constant calculator	Tool length (TCP position), tool weight and COG and tool moment of inertia can calculated automatically by designated program.	○	×
Self checking	Self check the error of robot and controller. (700 kind of errors)	○	○
Error detection	Check the condition of robot and controller all the time. Robot stops immediately when error happens.	○	○
Logical I/O	Maximum 2,048 logical inputs and 2,048 logical outputs are available as standard. I/O card is option.	○	○
Signal assignment	Port assignment and positive/negative logic of all I/O is available.	○	—

○; Supported, —; Setting disable (Execution enable), ×; Not supported

Functions	Abstract	Smart TP	Compact TP
Editor	1. Screen editor Addition, deletion and copy of every move step and function is available. Recorded position can be also edited. 2. Copy utility Recorded program and step can be copied. 3. Program conversion Condition & speed, each axis angle, parallel shift, etc. 4. Program Certification File directory, file verify	○	×
Machine lock	This can check I/O by playback program, keeping robot stationary.	○	○
I/O simulation	This can check program flow by changing logical I/O from teach pendant, keeping physical I/O locked.	○	○
Memory protect	This can protect program to avoid the modification and deletion by careless operation.	○	—
Power saver	This can save energy by motor power off and brake lock after pre-determined time passed with no movement. When more time passed, fan motors inside of cabinet will stop for further power saving.	○	○
Monitor utility	Real time monitor of following data; 1. Robot program	○	○
	2. Error logging	○	○
	3. Fixed I/O	○	—
	4. General usage I/O	○	○
	5. Program queue	○	—
	6. Operating time and or so	○	—
Help message (Built-in manual)	Operations and function explanations are displayed on teach pendant. And graphical troubleshooting manual is also displayed.	○	×
Customization	Software keys are re-locatable for better operation.	○	×
Power failure backup	When main power is down while playback robot, all necessary data is back upped for easy restarting of the robot after power on.	○	○
Program queue	Up to 10 programs to be played back can be reserved.	○	—
Home position	Up to 32 home position can be defined. Home position signal is outputted.	○	—
Function commands	・ General usage signal output ・ General usage signal input ・ Program flow control (step jump/call, program jump/call) ・ Timer delay ・ Welding, and or so	○	○

○; Supported, ―; Setting disable (Execution enable), ×; Not supported

Functions	Abstract	Smart TP	Compact TP
Interface panel	Pushbuttons and lamps can be arranged on teach pendant touch panel screen. Operating switches and indicators are replaced to software, so this utility can contribute to cost down. Available to register up to 31 keys /screen * 8 screens = 248 keys	○	×
Ethernet	File upload and download via Ethernet is available. (1 port)	○	○
Built-in PLC	This is software programmable logic controller. Physical I/O board (another option) is necessary to perform I/O actually.(Refer to hardware option)	○	―
High Speed Interference Detection	In the case operation mistake or unexpected interference occurs during teaching work, this function can detect it as a contact with outside world, and stops the robot immediately.	○	○
Overhaul Prediction	This is to prevent from trouble occurrence by estimating the lifespan of bearings in each robot arm and by detecting torque over. Furthermore, this function can predict the overhaul timing of robot.	○	―
Palletizing	Palletizing and de-palletizing teaching can be programmed by easy pattern definition.	○	―
Adaptive motion control	Enabling to drive each joint softly.	○	―
Oscilloscope	Enabling to monitor the servo data such as velocity, current, etc. of each joint by graphical display on teach pendant.	○	―
Fine motion control	Enabling to improve the locus accuracy. Command is recorded in step.	○	―
User Task	Task program can be executed separately from robot program.	○	―
Language	English Japanese Chinese Korean Germany Italian Spanish	○	× (*)

(*) Japanese is KANA characters. Chinese is Pin-In alphabetic characters. Other language is English.

9. PC tool

No.	Item	Specification
1	FDonDesk Light (Free software)	This is the software on personal computer to do the parameter setting and robot programming of CFD controller. Data up/download is available by connecting personal computer with CFD controller via Ethernet. All of CFD operation is available, including cycle time simulation 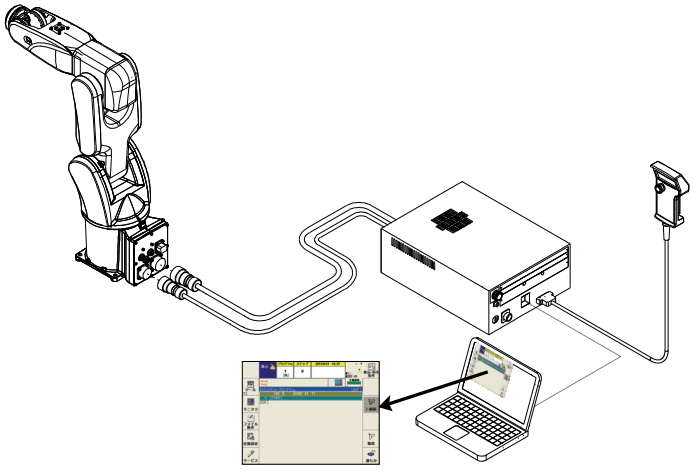 Even in case of operating high performance screen which is not supported by Compact TP, such screen is displayed on personal computer because it is connected online with robot controller.

Other than above software, we can provide “FDonDESK Pro” (option software, not free).
See “10. Options” for detail.

10. Options

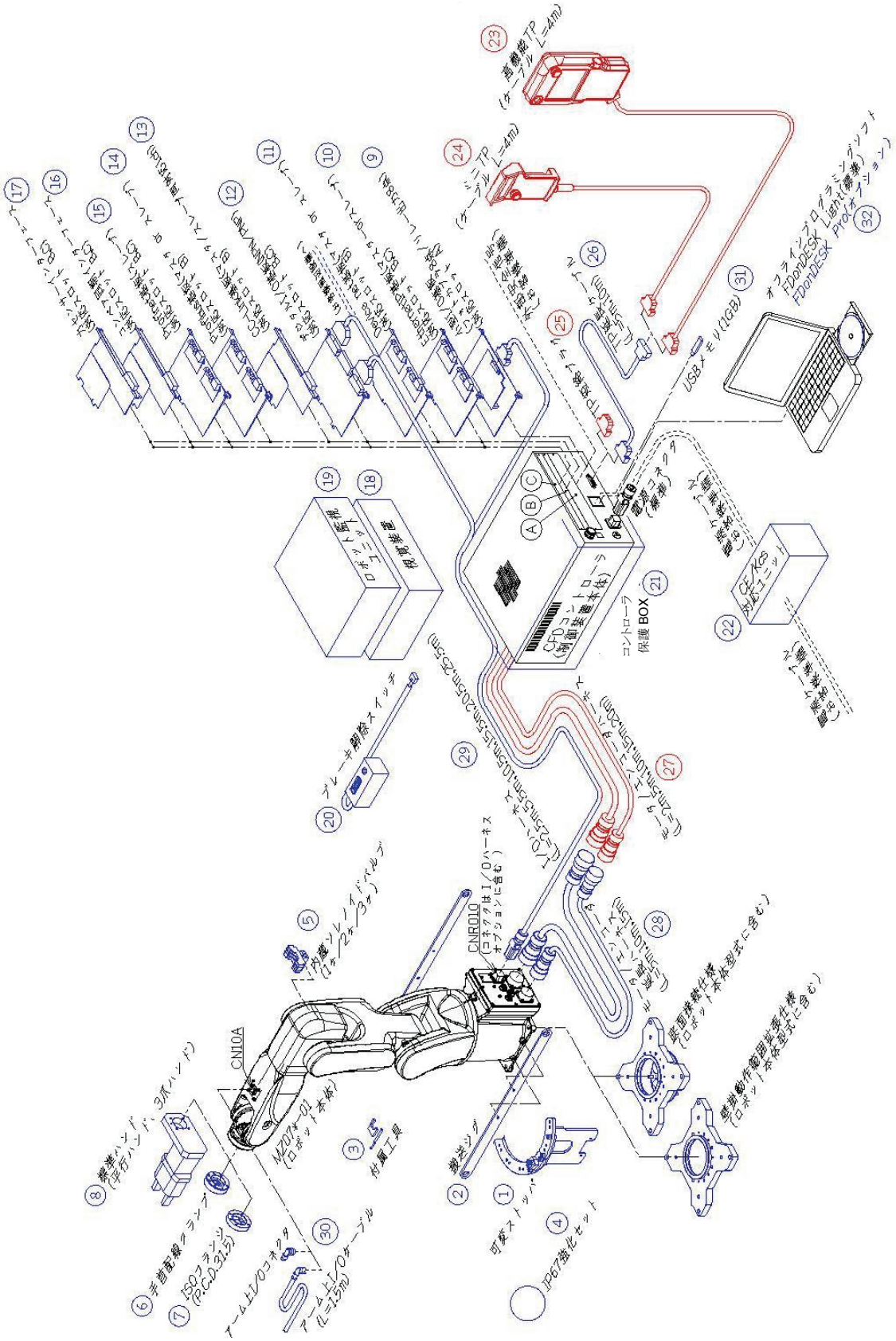
CN10A
CNR010
コントローラ
保護 BOX
USB メモリ(1GB)
ブレーキ解除スイッチ
可変ストッパ
IP67強化セット
ISO フランジ
(P.C.D.31.5)
アーム上I/Oコネクタ
アーム上I/Oケーブル
(L=1.5m)
NZ07X-01
(ロボット本体)
CE/KCs
内蔵コンセント
オフラインプログラミングソフト
FDonDESK Lite(標準)
FDonDESK Pro(オプション)
TP接続ケーブル
(L=5m)
USB
A
B
C

■ Option List

No.	Item	Specifications	Parts No.	Notes
1	Adjustable stopper	Restriction of axis 1 to 3 working envelope	OP-S5-022	
2	Transfer jig	Common for crane transporting, inverted and wall mount	OP-S2-042	
3	Tools	Zeroing pin & Zeroing block	OP-T2-078	
4	IP67 set	Air purge unit in robot body	OP-H9-004	
5	Solenoid valve	1 valve	OP-H4-004	Pressure range : 0.1 to 0.5MPa Coil voltage : DC24V
		2 valves	OP-H5-008	
		3 valves	OP-H6-004	
6	Wires clamp	Clamp for wires and air tubes inside axis 5 hole	OP-W3-012	Air (φ4 : 7 lines), signals
7	ISO flange	P.C.D.31.5	OP-W2-012	
8	Standard gripper	Parallel gripper single S	OP-F10-002	Grip force 320N (air source 0.5MPa), 24mm stroke
		Parallel gripper double S	OP-F10-003	
		Parallel gripper single M	OP-F10-004	Grip force 600N (air source 0.5MPa). 30mm stroke
		Three fingers single S	OP-F10-005	Grip force 300N (air source 0.5MPa). 8mm stroke
		Three fingers double S	OP-F10-006	
		Three fingers single M	OP-F10-007	Grip force 410N (air source 0.5MPa), 10mm stroke
		Three fingers double M	OP-F10-008	
9	Mini I/O board	I/O Photo coupler 8 inputs / NPN Transistor 8 outputs	CFD-OP150-A	Mounted on sequence board of slot A
		I/O Photo coupler 8 inputs / Relay contact 8 outputs	CFD-OP150-B	
10	EtherNet/IP board	Master 1CH	CFD-OP130-A	Occupies 1 slot
		Slave 1CH	CFD-OP130-B	
		Master 1CH + Slave 1CH	CFD-OP130-C	
		Slave 2CH	CFD-OP130-D	
		Master 2CH	CFD-OP130-E	
11	DeviceNet board	Master 1CH	CFD-OP131-A	Occupies 1 slot
		Slave 1CH	CFD-OP131-B	
		Master 1CH +Slave 1CH	CFD-OP131-C	
		Slave 2CH	CFD-OP131-D	
		Master 2CH	CFD-OP131-E	
12	Digital I/O board	I/O Photo coupler 32 inputs / NPN Transistor 32 outputs	CFD-OP125-A	Occupies 1 slot
		I/O Photo coupler 64 inputs / NPN Transistor 64 outputs	CFD-OP125-B	Occupies 2 slots
		I/O Photo coupler 32 inputs / PNP Transistor 32 outputs	CFD-OP151-A	Occupies 1 slot
		I/O Photo coupler 64 inputs / PNP Transistor 64 outputs	CFD-OP151-B	Occupies 2 slots
13	CC-Link board	Both master and slave 1CH	CFD-OP98-B	Occupies 1 slot
14	PROFIBUS board	Master 1CH	CFD-OP132-A	Occupies 1 slot
		Slave 1CH	CFD-OP132-B	
		Master 1CH + Slave 1CH	CFD-OP132-C	
		Slave 2CH	CFD-OP132-D	
		Master 2CH	CFD-OP132-E	
15	PROFINET board	Slave 1CH	CFD-OP136-B	Occupies 1 slot
		Slave 2CH	CFD-OP136-D	
16	Conveyor Tracking I/F	RS422 Differential input encoder counter	CFD-OP47-A	Occupies 1 slot
17	Force sensor I/F	Force sensor unit for CFD (another box)	CFD-OP152-A	Occupies 1 slot
18	Vision sensor	Vision sensor unit for CFD (another box)	CFD-OP139-A	
19	Robot monitoring unit	Robot monitoring unit for CFD (another box)	CFD-OP145-A	
20	Brake release switch	Brake release switch (portable type)	FD11-OP90-E	
21	Controller protection BOX	Upgraded to IP54 equivalent by preparing dust-proof and drip-proof box	CFD-OP133-A	
22	UL specification	Some parts are replaced to conform to UL standard	CFD-UL-A	
	CE marking specification	Some parts are replaced to conform to European CE marking	CFD-CE-A	
	KCs specification	Some parts are replaced to conform to Korean KCs standard	CFD-KCS-A	
23	Smart TP	Cable length 4m	CFDTP-10-04M	These are selectable option. One of them must be selected.
24	Compact TP	Cable length 4m	MINITP-10-04M	
25	TP shorting plug	To disconnect teach pendant	CFD-OP153-A	
26	Teach Pendant extension cable	5m	CFDTP-RC05M	Only one cable can be added. Both side have connector
		10m	CFDTP-RC10M	

No.	Item	Specifications	Parts No.	Notes
27	Motor/Encoder harness	2m	Z101C-J1-02-A	Harness between robot and controller These are selectable option. One of them must be selected.
		5m	Z101C-J1-05-A	
		10m	Z101C-J1-10-A	
		15m	Z101C-J1-15-A	
		20m	Z101C-J1-20-A	
28	Motor/Encoder extension harness	5m	Z102C-00-05-A	Only one cable can be added. Total length is 25m at maximum. Both side is connector
		10m	Z102C-00-10-A	
		15m	Z102C-00-15-A	
29	I/O harness	2.5m	IOCABLE-10-02M	I/O cable between robot and controller. Controller side is separate cable. Manufacturing needs to be done by customer.
		5.5m	IOCABLE-10-05M	
		10.5m	IOCABLE-10-10M	
		15.5m	IOCABLE-10-15M	
		20.5m	IOCABLE-10-20M	
		25.5m	IOCABLE-10-25M	
30	I/O cable on robot arm	1.5m	IOCABLE-20-01M	Tool side is separate cable. Manufacturing needs to be done by customer.
	I/O connector on robot arm	Connector only Soldering type	IOCABLE-20-00	This is connector only. Manufacturing needs to be done by customer.
31	USB memory	1GByte	FD11-OP93-A	
32	FDonDESK Pro	Robot Program Simulator	FDonDESK Pro	

DeviceNet and EtherNet/IP is a trademark of ODVA (Open DeviceNet Vender Association, Inc.).
CC-Link is a trademark of CC-Link Partner Association : CLPA.
PROFIBUS and PROFINET is a trademark of PROFIBUS & PROFINET International.

・5：Solenoid valve; Type SYJ3220-5GR-M3 (SMC), 3 position closed center, Coil voltage DC24V, Consuming power 0.35W, With surge voltage protector circuit (no pole), With 300mm cables, No-lock push type manual operation, Without sub-plate for tube, Without bracket
・8：Standard Gripper; Grip force may vary according to the supplied air pressure (0.3 to 0.5 MPa) and finger length.
・9：Mini I/O Board
Photo coupler input; DC24V no pole, Input resistance 3KΩ/8mA
NPN Transistor output; DC24V NPN, output voltage DC36V, output current 100mA
Relay contact output; Output voltage DC30V, output current 500mA
・10,11,13,14,15： each Fieldbus Board Available up to 4 channels. Maximum channel quantity may vary according to Fieldbus specification and combination with other options.
・12：Digital I/O Board
Photo coupler input; DC24V no pole, Input resistance 3KΩ/8mA
NPN Transistor output; DC24V NPN, output voltage DC36V output current 100mA
PNP Transistor output; DC24V PNP, output voltage DC36V output current 100mA
・16：Conveyor synchronization I/F To perform conveyor synchronized motion, speed signal receiver board is added. Differential input (conforming to RS-422), Terminating register 100Ω (set by SW on board), Response frequency 1MHz at maximum
・18：Vision sensor can see the target such as work-piece by camera, and measure its position Additional box is necessary. So controller size changes.
・19：Robot monitoring unit can monitor the robot position and speed. Additional box is necessary. So controller size changes.
・25：TP shorting plug is used to connect to the controller instead of TP to short emergency stop circuit.
・26：TP cable diameter φ5.8mm, minimum bending radius 35mm
・27,28；Motor/Encoder harness Motor cable diameter φ16.6mm, minimum bending radius 100mm, Encoder cable diameter φ13.2mm, minimum bending radius 80mm Total length is 25m at maximum.
・29；I/O harness includes robot side connector CNR010. Cable diameter φ10.5mm, minimum bending radius 65mm.
・31：USB memory is used to backup program and constant files. Insertion port is on the front panel as standard.
・32："FDonDESK Pro" is the software on personal computer to do parameter setting and robot programming of CFD controller. Data up/download is available by connecting personal computer with CFD controller via Ethernet. This software is upgraded from "FDonDESK Light", program creation utility from CAD data and multi robot control is available.

■ Software (only smart TP)

No.	Item	Specification	Parts No.
1	Flexible Gui (Graphical User Interface)	Utility to design switches such as buttons, indicators and digital displays on teach pendant screen.	FlexGui
2	FlexGuiSingleRemote	Utility to communicate with FlexGuiToolBox via network, and to perform data communication, screen monitoring of FlexGui.	FlexGuiSingleRemote
3	FlexGuiPCRemote	License for FlexGuiToolBox. 1 license enables communication with plural FlexGii (unlimited).	FlexGuiPCRemote

■ Document

No.	Item	Specification
1	Instruction manual	Document explaining the basic operation and setup operation and or so. Please select either of paper manual or CD manual.

11. Delivery style (specification which contains a robot)

1. There are three styles as shown below.

	Style	Details
1	Delivery on the truck	Robot is delivered on the truck near the entrance of customer's plant. (Installation and test-run is not included)
2	Delivery after installation and test-run	Robot is installed and test-run is done. (Teaching with work piece is not included.)
3	Delivery after installation and teaching with work piece	After style 2, teaching with work piece is done.

Because the expense is different, which form to choose be sufficiently examined.

2. Operation and maintenance education

The special spot operation guide and the special spot preservation guide are the outside of the estimation. Consult with each NACHI-FUJIKOSHI office for the details as for the schooling system.

12. Consuming power (Robot + Controller)

0.4 kVA at maximum (may vary according to the application and motion pattern.)

13. Paint color (Robot)

Standard color	Robot cover and wrist 1	Munsell 6.5PB9/1
	Arm	Munsell N5.5
	Base	Munsell N5.5

14. Warranty

Elapse of 1 year after delivery. (8 hours/day running)

The specification and externals described in this specifications might change without a previous notice for the improvement.

NACHI
NACHI-FUJIKOSHI CORP.

http://www.nachi-fujikoshi.co.jp/

JAPAN MAIN OFFICE	Phone: +81-3-5568-5245	Fax: +81-3-5568-5236	Shiodome Sumitomo Bldg. 17F, 1-9-2 Higashi-Shinbashi Minato-ku, TOKYO, 105-0021 JAPAN

NACHI NORTH AMERICA

http://www.nachirobotics.com/

North America Headquarters	Phone: 248-305-6545	Fax: 248-305-6542	22285 Roethel Drive, Novi, Michigan 48375 U.S.A.
Greenville Service Office	Use 248-305-6545	Use 248-305-6542	South Carolina, U.S.A.
San Antonio Service Office	Use 248-305-6545	Use 248-305-6542	Texas, U.S.A.
Kentucky Branch Office	Phone: 502-695-4816	Fax: 502-695-4818	116 Collision Center Drive, Suite A, Frankfort, KY 40601 U.S.A
Training Office	Phone: 248-334-8250	Fax: 248-334-8270	22213 Roethel Drive, Novi, Michigan 48375 U.S.A.
Toronto Branch Office	Phone: 905-760-9542	Fax: 905-760-9477	89 Courtland Avenue, Unit 2, Vaughan, Ontario L4K3T4 CANADA
Mexico Branch Office	Phone : +52-555312-6556	Fax: +52-55-5312-7248	Urbina # 54, Parque Industrial Naucalpan, Naucalpan de Juarez, 53370, Estado de México, MEXICO
Saltillo Service Office	Phone : +52-844416-8053	Fax: +52-844416-8053	Canada 544 Privada Luxemburgo C. P. 25230, Saltillo, Coahuila, MEXICO

NACHI ROBOTIC EUROPE

Germany

http://www.nachi.de/

Nachi Europe GmbH	Phone: +49-(0)2151-65046-0	Fax: +49-(0)2151-65046-90	Bischofstrasse 99, 47809, Krefeld,GERMANY

United Kingdom

http://www.nachi.co.uk/

Nachi U.K. LTD.	Phone: +44-(0)121-250-1895	Fax: +44-(0)121-250-1899	Unit 7, Junction Six Industrial Estate, Electric Avenue, Birmingham B6 7JJ, U.K.

Czech Republic

Nachi Europe	Phone: + 420-255-734-000	Fax: +420-255-734-001	Prague 9, VGP Park, Czech republic

NACHI SHANGHAI CO., LTD.

http://www.nachi.com.cn/

Representative Office	Phone: +86-(0)21-6915-2200	Fax: +86-(0)21-6915-2200	11F Royal Wealth Centre, No.7 Lane 98 Danba Road Putuo District, Shanghai 200062, China

NACHI KOREA

http://www.nachi-korea.co.kr/

Representative Office	Phone: +82-(0)2-469-2254	Fax: +82-(0)2-469-2264	2F Dongsan Bldg. 276-4, Sungsu 2GA-3DONG, Sungdong-ku, Seoul 133-123, KOREA

Copyright NACHI-FUJIKOSHI CORP.

Robot Division

1-1-1, FUJIKOSHIHONMACHI, TOYAMA CITY, JAPAN 930-8511
Phone +81-76-423-5137
Fax +81-76-493-5252

NACHI-FUJIKOSHI CORP. holds all rights of this document. No part of this manual may be photocopied or reproduced in any from without prior written consent from NACHI-FUJIKOSHI CORP. Contents of this document may be modified without notice. Any missing page or erratic pagination in this document will be replaced.

In case that an end user uses this product for military purpose or production of weapon, this product may be liable for the subject of export restriction stipulated in the Foreign Exchange and Foreign Trade Control Law. Please go through careful investigation and necessary formalities for export.

Original manual is written in Japanese.

NACHI-FUJIKOSHI CORP. ©